ASSEMBLY INSTRUCTION

LIDO LOUNGE SOFA

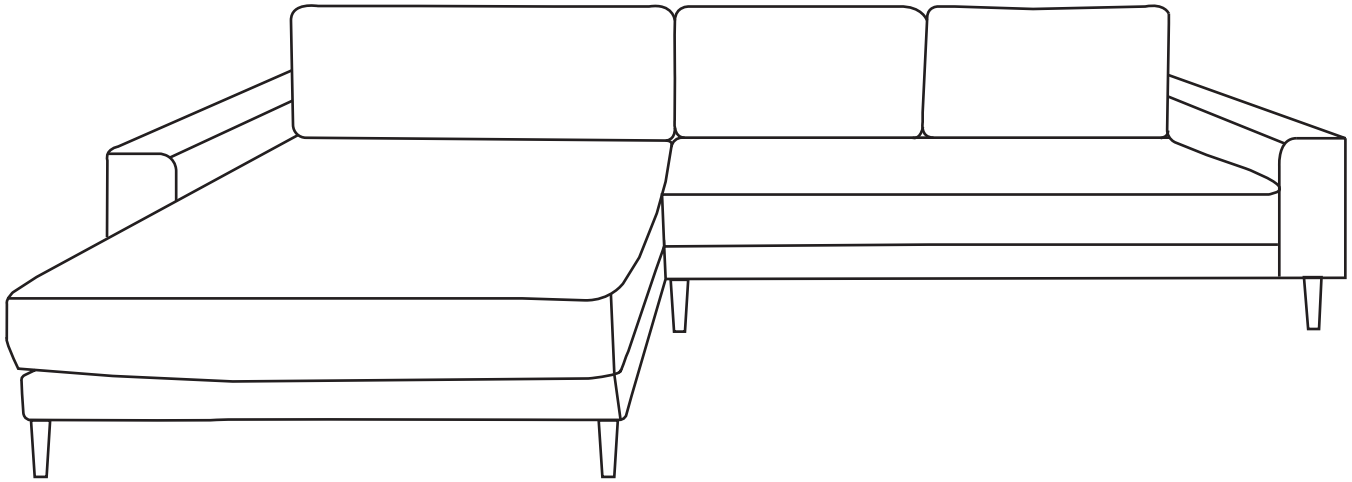

Legs x 9

Legs x 2

1 Screw the legs on to the sofa

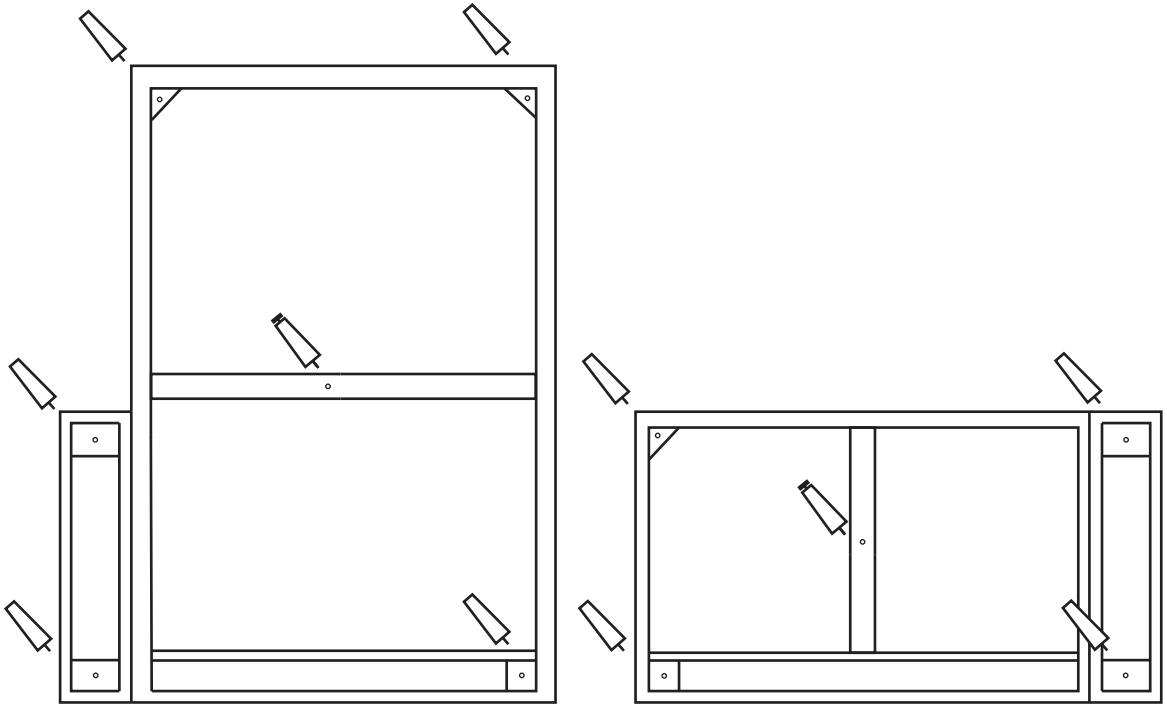

2

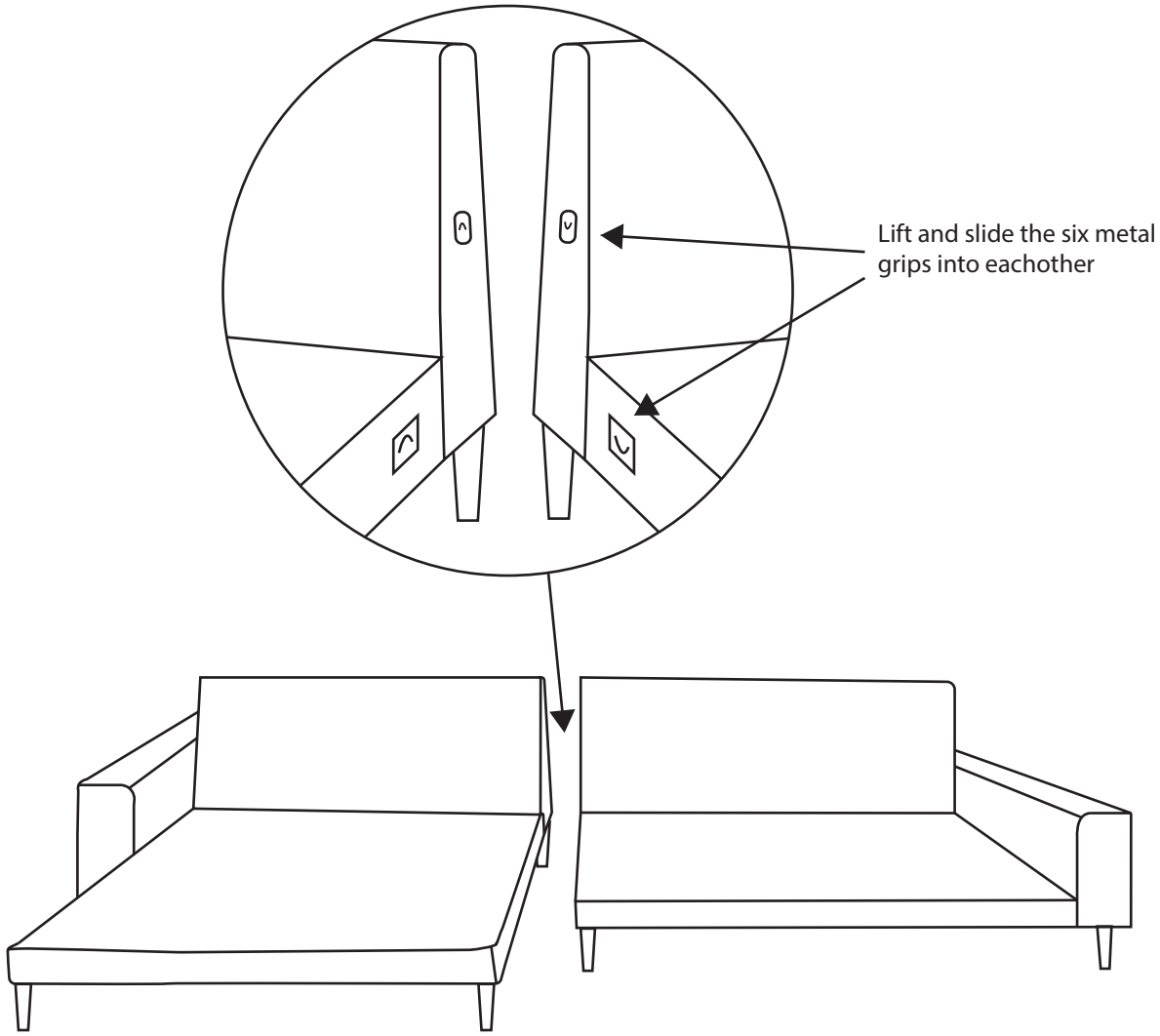

3 Place the cushions in the sofa

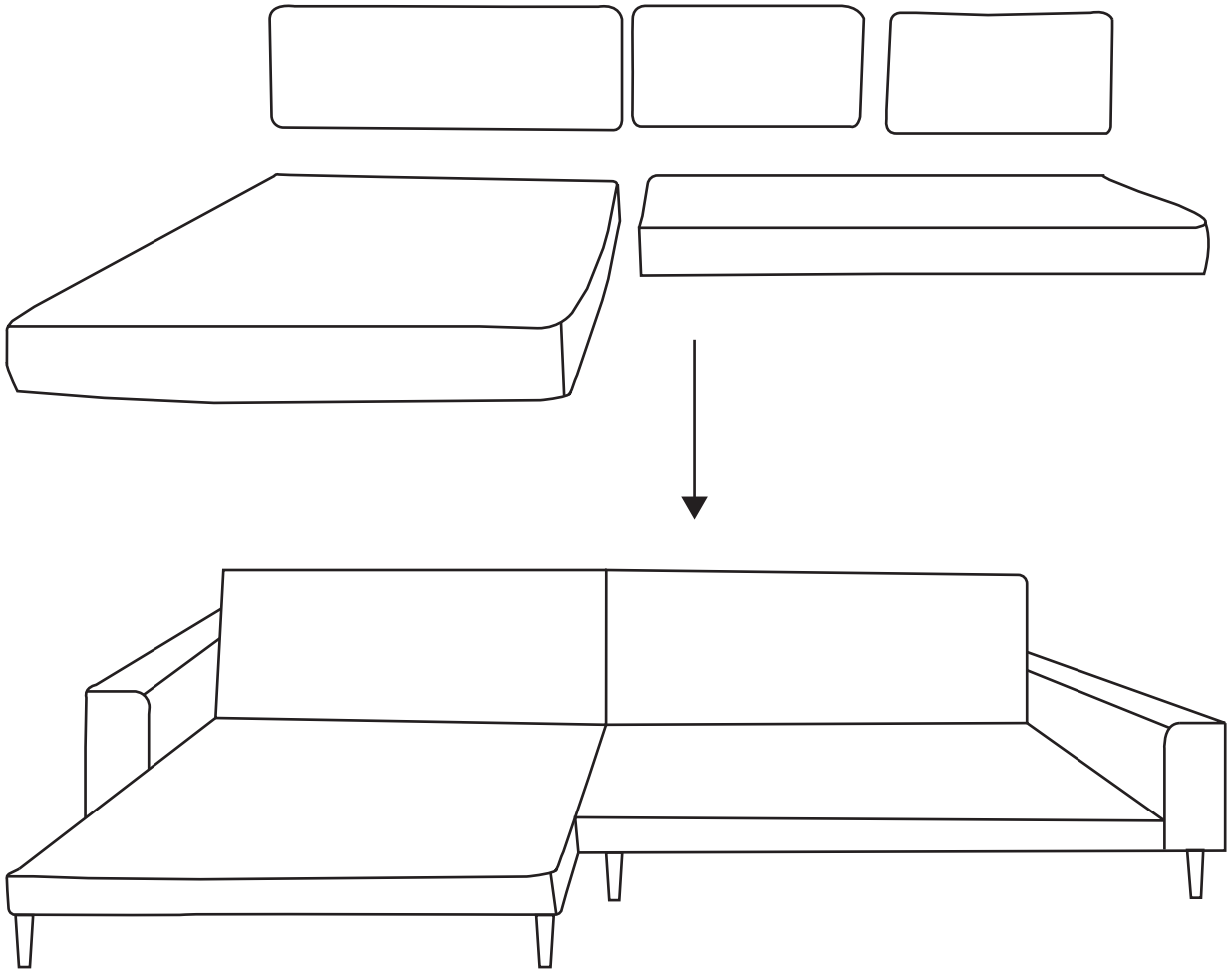

4

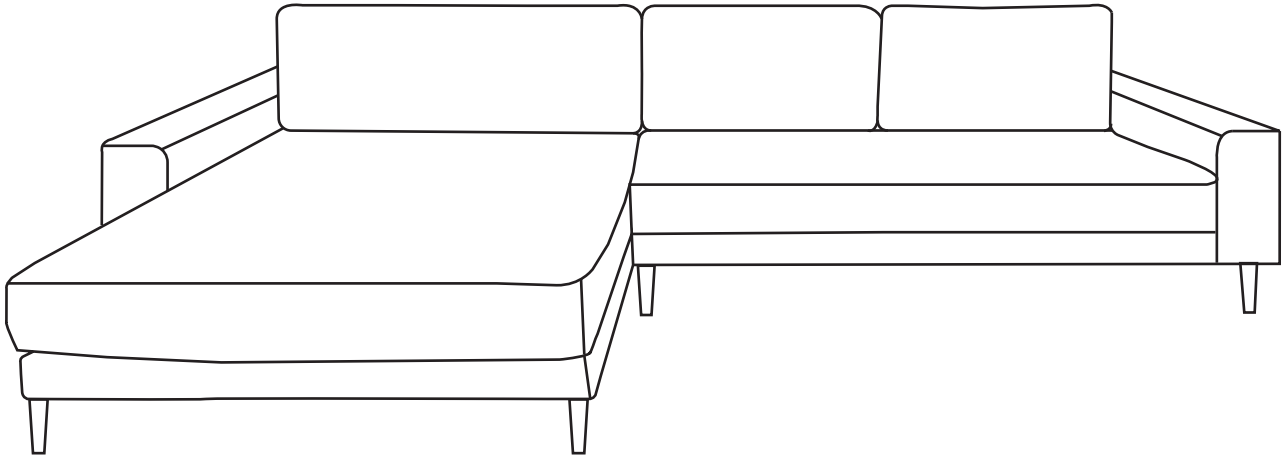

The fabric is non-washable and non-removable.